YENYO

FRR0516G

Glass Passivated Fast Recovery Rectifier

Voltage 1600 Volt
Current 0.5 Ampere

Features

- ✶ Fast switching for high efficiency
- ✶ Low forward voltage drop
- ✶ High current capability
- ✶ Low reverse leakage current
- ✶ High surge current capability

Mechanical Data

- ✶ Case: Molded plastic, DO-41
- ✶ Epoxy: UL 94V-0 rate flame retardant
- ✶ Terminals: Solderable per MIL-STD-202, method 208
- ✶ Polarity: Color band denotes cathode end
- ✶ Mounting position: Any

DO-41

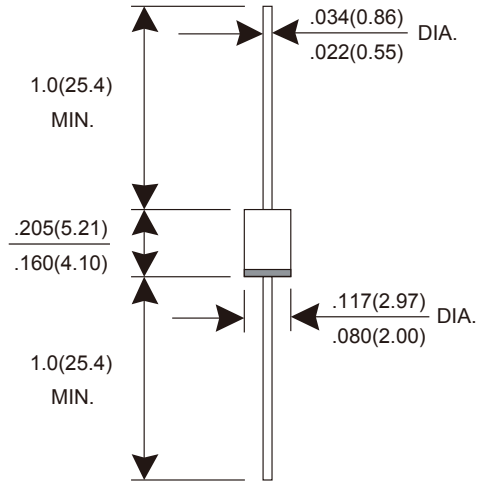

Dimensions in inches and (millimeters)

MAXIMUM RATINGS AND ELECTRICAL CHARACTERISTICS

Rating at 25°C ambient temperature unless otherwise specified.
Single phase, half wave, 60Hz, resistive or inductive load.
For capacitive load, derate current by 20%.

PARAMETER	SYMBOL	VALUE	UNIT
Maximum repetitive peak reverse voltage	V_{RRM}	1600	V
Maximum RMS voltage	V_{RMS}	1120	V
Maximum DC blocking voltage	V_{DC}	1600	V
Maximum average forward rectified current @T_A=55°C	$I_{F(AV)}$	0.5	A
Peak forward surge current 8.3 ms single half sine-wave superimposed on rated load	I_{FSM}	20	A
Maximum instantaneous forward voltage @ I_F=0.1A	V_F	2.5	V
Maximum DC reverse current @T_A=25°C at rated DC blocking voltage @T_A=125°C	I_R	5 500	μA
Maximum reverse recovery time (Note 1)	t_{rr}	300	ns
Typical thermal resistance from junction to ambient	$R_{\theta JA}$	65	°C/W
Operating junction and storage temperature range	T_J,T_{STG}	-55 to +150	°C

Note : (1) Reverse recovery test conditions I_F = 0.5A, I_R = 1.0A, Irr = 0.25A.

RATINGS AND CHARACTERISTICS CURVES

Fig.1 - Forward Current Derating Curve

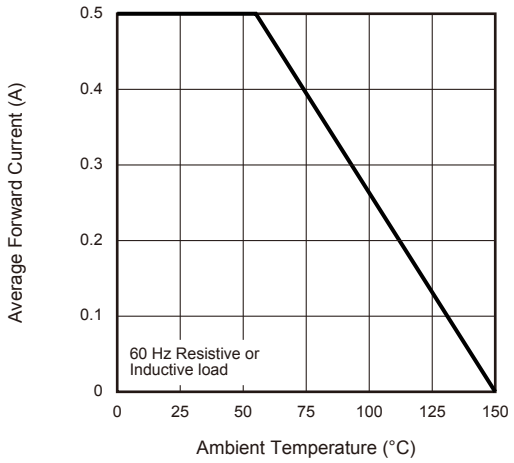

Fig.2 - Maximum Non-Repetitive Peak Forward Surge Current

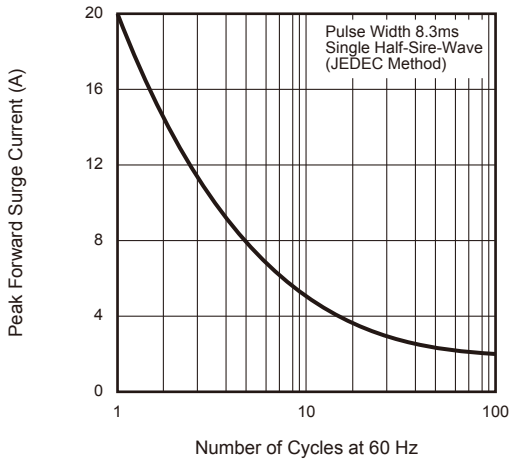

Fig.3 - Typical Instantaneous Forward Characteristics

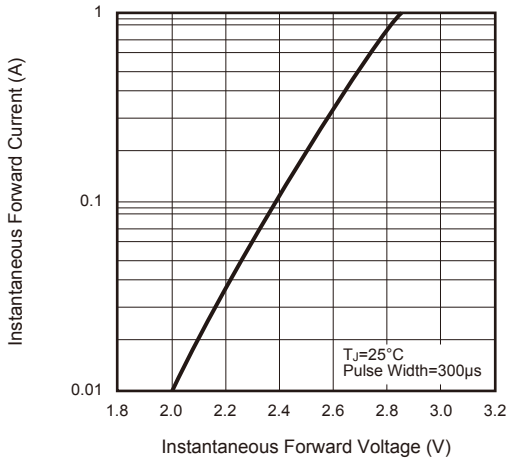

Fig.4 - Typical Reverse Leakage Characteristics

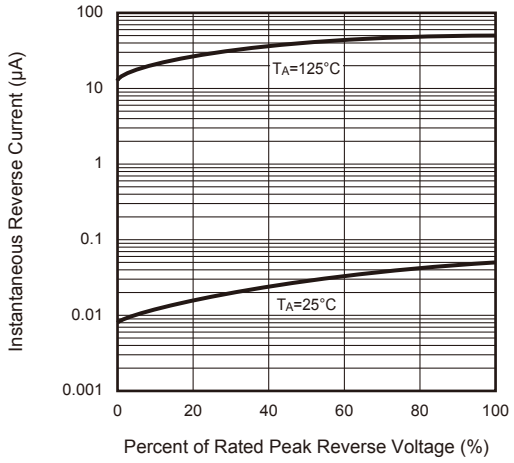

ORDERING INFORMATION

Part Number	Marking Code	Package	Quantity	Delivery Mode
FRR0516G	FRR0516G	DO-41	5,000	Tape & Ammo box
FRR0516G	FRR0516G	DO-41	5,000	Tape & Reel